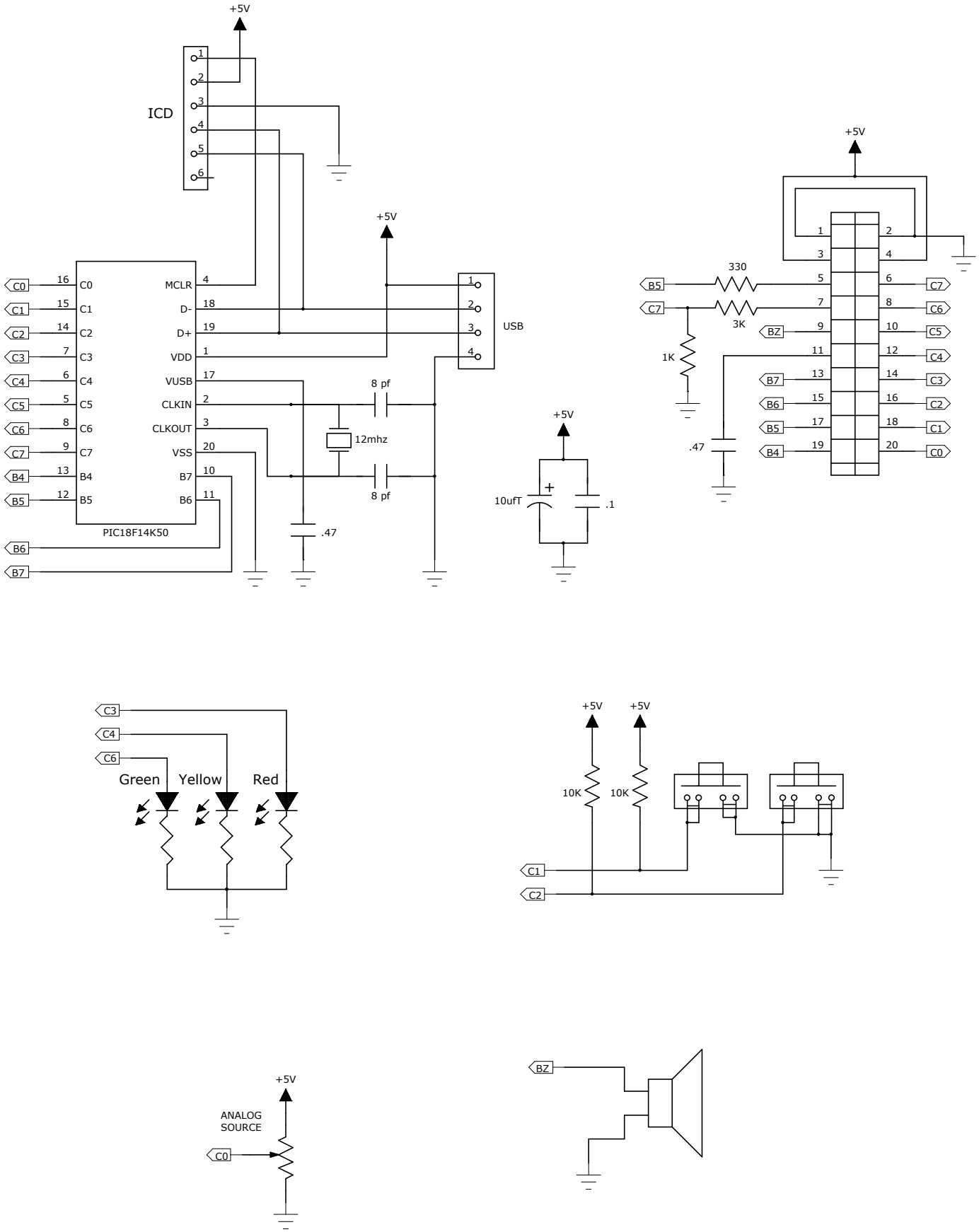
+5V
ICD
1
2
3
4
5
6
+5V
C0
C1
C2
C3
C4
C5
C6
C7
B4
B5
B6
B7
16
15
14
7
6
5
8
9
13
12
MCLR
D-
D+
VDD
VUSB
CLKIN
CLKOUT
VSS
B7
B6
4
18
19
1
17
2
3
20
10
11
PIC18F14K50
8 pf
12mhz
8 pf
.47
USB
+5V
10ufT
.1
+5V
330
3K
1K
.47
BZ
Green
Yellow
Red
+5V
+5V
10K
10K
ANALOG
SOURCE
+5V